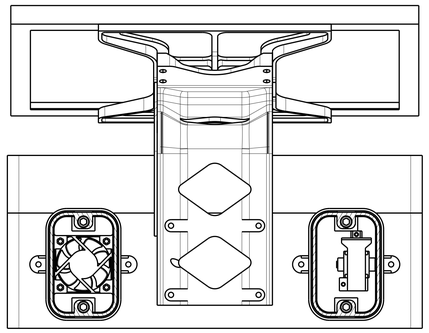

SECTION D-D

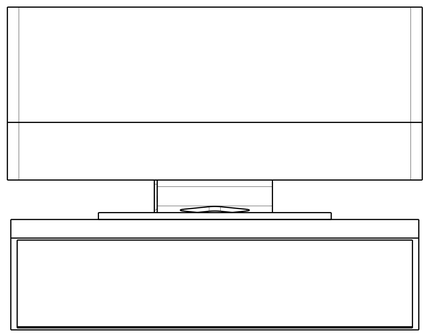

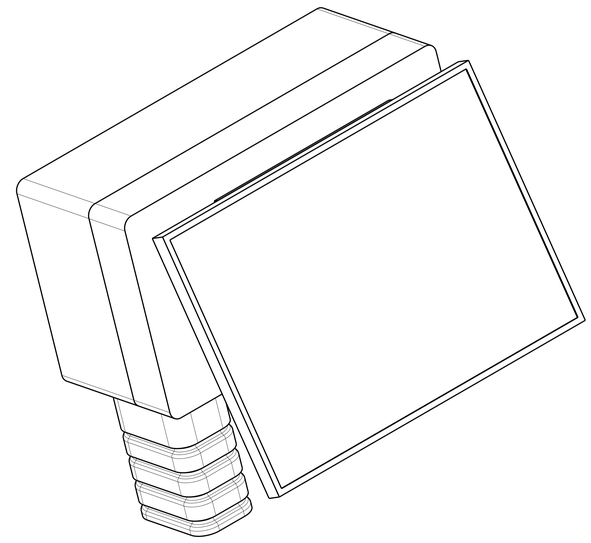

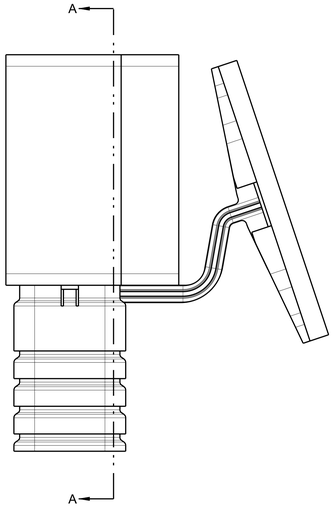

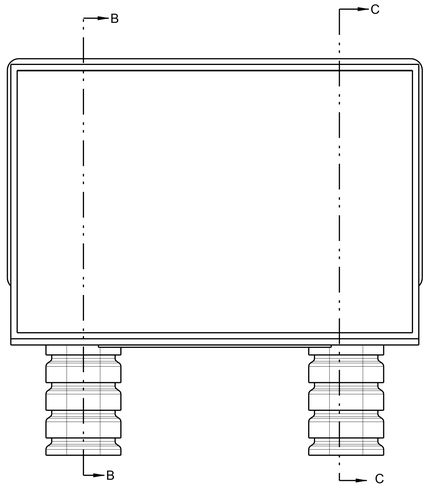

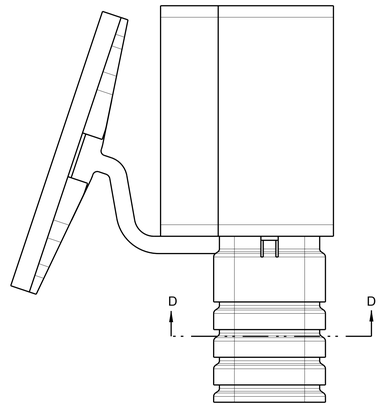

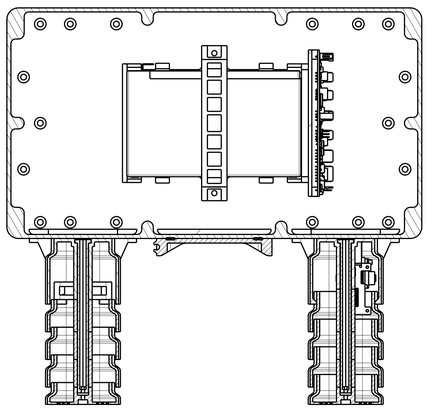

SECTION A-A

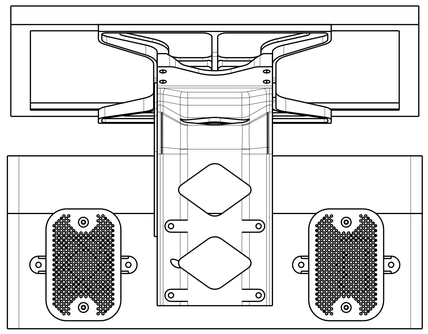

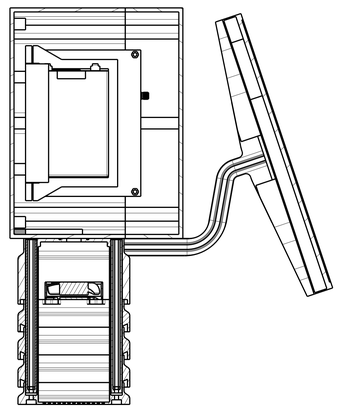

SECTION B-B

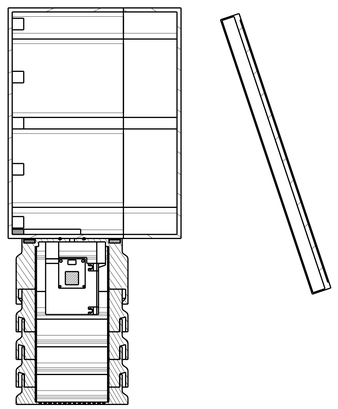

SECTION C-C